TSURUMI PUMP

www.tsurumiavant.com

50Hz

TSURUMI AVANT

MMR SERIES

SUBMERSIBLE MIXERS

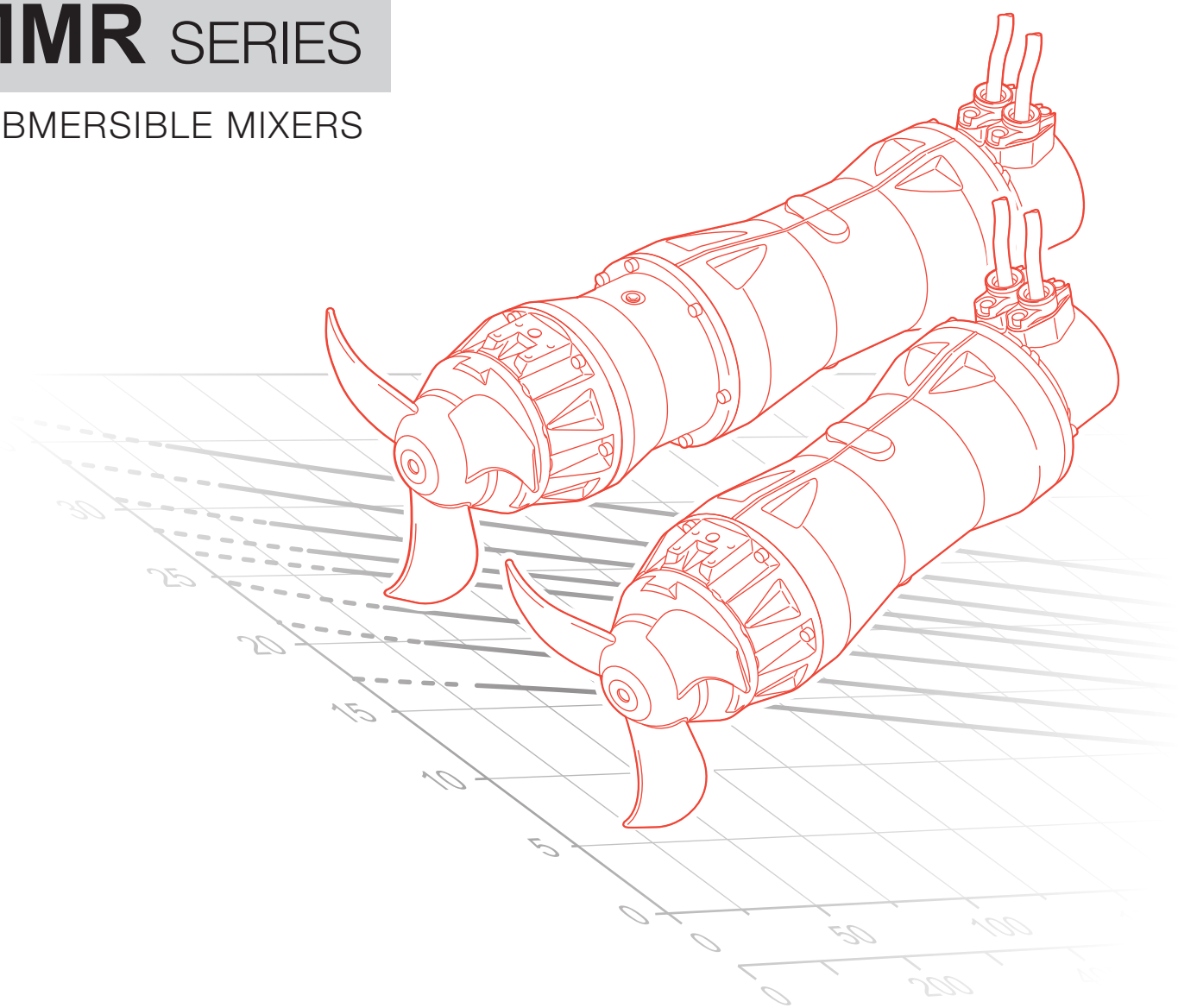

D A T A B O O K L E T

TSURUMI PUMP

TSURUMI AVANT

MMR SERIES

SUBMERSIBLE MIXERS

50Hz

D A T A B O O K L E T

MMR Series

General characteristics

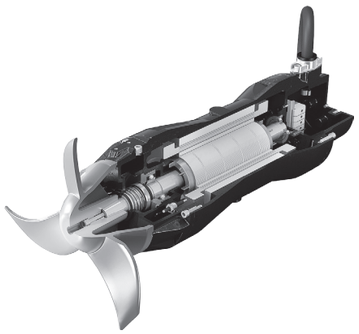

- Innovative cable gland system with cable holder. The universal thread ring-nut can be removed to fix a rigid or flexible duct to the cable gland to protect the cable from physical and mechanical stresses.
- Premium IE3 class cold-running motor for high efficiency and minimal energy use. Insulation class H (180°C).
- Some versions are suitable for 60°C max ambient temperature. (on request)
- Two silicon carbide (SiC) mechanical seals protected inside a large, inspectable oil chamber. MMR 650-series equipped with 3 mechanical seals.
- Cast AISI 316 stainless steel propeller, designed with specially shaped blades to ensure high hydraulic efficiency and prevent fouling with filaments and solids. Extra thick for ruggedness and reliability even in heavy-duty conditions.
- Ball bearings with lifetime lubrication designed to guarantee 100,000 working hours. Temperature sensor on request.
- Rugged planetary reduction gearbox which provides high reduction ratios and torque transfer and withstands heavy radial loads, with compact size and light weight.
- Water sensor detecting seepage into the mechanical seal oil chamber. The temperature sensor prevents possible damage due to overheating of the motor. Bearing temperature sensors are available on request. (other monitoring options are available for the MMR 650-series on request)
- Wide range of rugged stainless steel accessories for optimal installation in relation to the system layout and when replacing existing devices.

Available series

DIRECT TRANSMISSION (200 - 300 - 400 Series)

page 5

- 4 - 6 - 8 poles motor with DIRECT TRANSMISSION
- Motor power 0.75 - 4.5 kW
- Propeller Ø 200 - 300 - 400 mm

REDUCTION GEARS (650 Series)

page 15

- 4 poles motor with REDUCTION GEARS
- Motor power 4 - 7.5 kW
- Propeller Ø 650 mm

Key to product code

MMR 2 3 N F 4 1.5 D - 5

① ② ③ ④ ⑤ ⑥ ⑦ ⑧ ⑨

① Series
② Propeller diameter
- 2 : Ø 200
- 3 : Ø 300
- 4 : Ø 400
- 6 : Ø 650

③ Type of propeller
④ With or without guide ring
- N : Without
- G : With

⑤ Material
- F : Cast iron
- R : Stainless steel

⑥ Poles
⑦ Motor power (kW)
⑧ Drive type
- D : Direct transmission
- G××× : Reduction gear + ratio
- ex) G 072 : Gear with 7.2 ratio

⑨ Frequency

MMR21NF4.75D-5

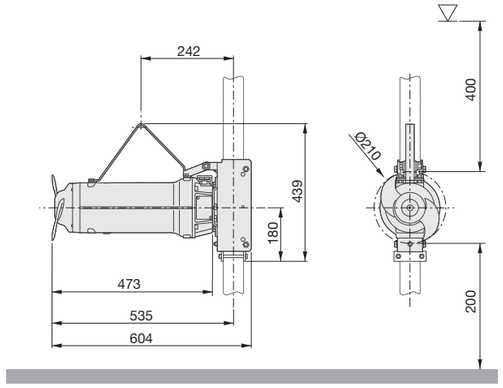

35 Kg (stand and guiding system excluded)

Product

Type	SUBMERSIBLE MIXER
Name	MMR21NF4.75D-5
Configured	-
Standard	CE

Motor

Rated Voltage	400 V
Frequency	50 Hz
Motor phases	3
Number of poles	4
Incoming power P2	0.75 kW
Electric power P1	0.9 kW
Rated current	1.8 A
rpm	1444 rpm
Efficiency	82.5 %
Cos Ø	0.729
Rated torque	5.0 Nm
Start	DOL
Starting current	11.2 A
Starting torque	12.1 Nm
Degree of protection	IP 68
Insulation class	H
Motor efficiency class ref.	IE3

Gear unit

Type	-
Gear ratio	1

Propeller

Name	21
Rated diameter	200 mm
Number of blades	2
rpm	1444 rpm
Pp2	0.51 kW
Propeller thrust	165 N
Jet ring	Optional

Cable

Type	4G1.5 + 3x1
Length	10 m

Monitoring

Thermal protector	klixon
Leakage sensor	1 in mechanical seals chamber

Operating limits

Ambient temperature	0 - 60°C
Max. density treated liquid	1100 Kg/m^3
pH treated liquid	6-14
Max. start per hour	20 /h (equally distributed)
Max. acoustic pressure level	Max 70 dB (A)
Operating mode	S1 – Continuous use

Construction materials

Case	Cast iron EN-GJL-250
Gear box	-
Propeller	AISI 316 (optional AISI 329)
Jet ring	-
Shaft	AISI 431
Mechanical seal (motor side)	Silicon carbide
Mechanical seal (propeller side)	Silicon carbide
Painting	Bi-epoxy 200 µm (optional 400 µm)
Screws	Stainless steel A2-70 (optional A4)
Gaskets	NBR
Fixing system	AISI 304 stainless steel (optional AISI 316)

Installation

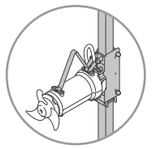

STANDARD

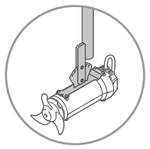

OPTIONAL

standard 60 x 60
optional 50 x 50
80 x 80
100 x 100

MMR

MMR22NF41.1D-5

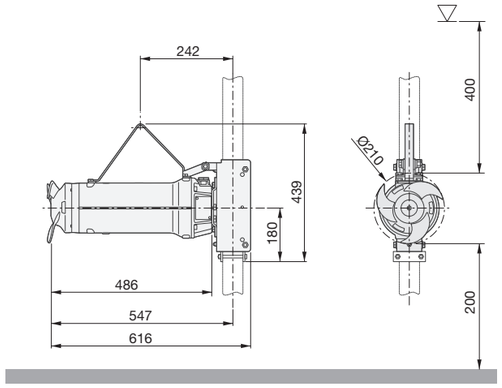

35 Kg (stand and guiding system excluded)

Product

Type	SUBMERSIBLE MIXER
Name	MMR22NF41.1D-5
Configured	-
Standard	CE

Motor

Rated Voltage	400 V
Frequency	50 Hz
Motor phases	3
Number of poles	4
Incoming power P2	1.1 kW
Electric power P1	1.3 kW
Rated current	2.7 A
rpm	1436 rpm
Efficiency	84.1%
Cos Ø	0.710
Rated torque	7.3 Nm
Start	DOL
Starting current	15.7 A
Starting torque	21.3 Nm
Degree of protection	IP 68
Insulation class	H
Motor efficiency class ref.	IE3

Gear unit

Type	-
Gear ratio	1

Propeller

Name	22
Rated diameter	200 mm
Number of blades	3
rpm	1436 rpm
Pp2	0.98 kW
Propeller thrust	220 N
Jet ring	Optional

Cable

Type	4G1.5 + 3x1
Length	10 m

Monitoring

Thermal protector	klixon
Leakage sensor	1 in mechanical seals chamber

Operating limits

Ambient temperature	0 - 60°C
Max. density treated liquid	1100 Kg/m³
pH treated liquid	6-14
Max. start per hour	20 /h (equally distributed)
Max. acoustic pressure level	Max 70 dB (A)
Operating mode	S1 – Continuous use

Construction materials

Case	Cast iron EN-GJL-250
Gear box	-
Propeller	AISI 316 (optional AISI 329)
Jet ring	-
Shaft	AISI 431
Mechanical seal (motor side)	Silicon carbide
Mechanical seal (propeller side)	Silicon carbide
Painting	Bi-epoxy 200 µm (optional 400 µm)
Screws	Stainless steel A2-70 (optional A4)
Gaskets	NBR
Fixing system	AISI 304 stainless steel (optional AISI 316)

Installation

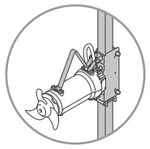

STANDARD

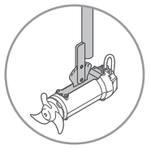

OPTIONAL

standard 60 x 60
optional 50 x 50
80 x 80
100 x 100

MMR

MMR23NF41.5D-5

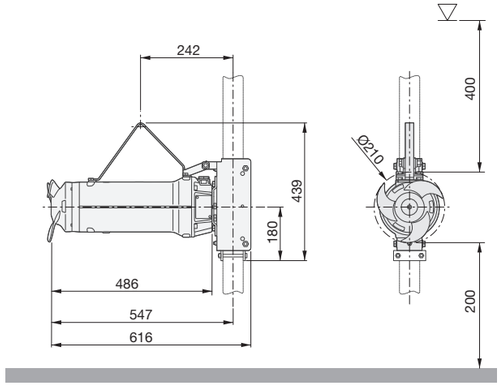

36 Kg (stand and guiding system excluded)

Product

Type	SUBMERSIBLE MIXER
Name	MMR23NF41.5D-5
Configured	-
Standard	CE

Motor

Rated Voltage	400 V
Frequency	50 Hz
Motor phases	3
Number of poles	4
Incoming power P2	1.5 kW
Electric power P1	1.8 kW
Rated current	3.6 A
rpm	1432 rpm
Efficiency	85.3%
Cos Ø	0.703
Rated torque	10.0 Nm
Start	DOL
Starting current	20.3 A
Starting torque	26.2 Nm
Degree of protection	IP 68
Insulation class	H
Motor efficiency class ref.	IE3

Gear unit

Type	-
Gear ratio	1

Propeller

Name	23
Rated diameter	200 mm
Number of blades	3
rpm	1432 rpm
Pp2	1.0 kW
Propeller thrust	230 N
Jet ring	Optional

Cable

Type	4G1.5 + 3x1
Length	10 m

Monitoring

Thermal protector	klixon
Leakage sensor	1 in mechanical seals chamber

Operating limits

Ambient temperature	0 - 60°C
Max. density treated liquid	1100 Kg/m³
pH treated liquid	6-14
Max. start per hour	20 /h (equally distributed)
Max. acoustic pressure level	Max 70 dB (A)
Operating mode	S1 – Continuous use

Construction materials

Case	Cast iron EN-GJL-250
Gear box	-
Propeller	AISI 316 (optional AISI 329)
Jet ring	-
Shaft	AISI 431
Mechanical seal (motor side)	Silicon carbide
Mechanical seal (propeller side)	Silicon carbide
Painting	Bi-epoxy 200 µm (optional 400 µm)
Screws	Stainless steel A2-70 (optional A4)
Gaskets	NBR
Fixing system	AISI 304 stainless steel (optional AISI 316)

Installation

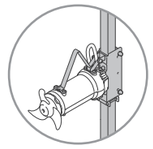

STANDARD

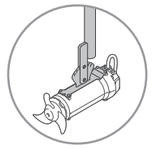

OPTIONAL

standard 60 x 60
optional 50 x 50
80 x 80
100 x 100

MMR

MMR33NF61.5D-5

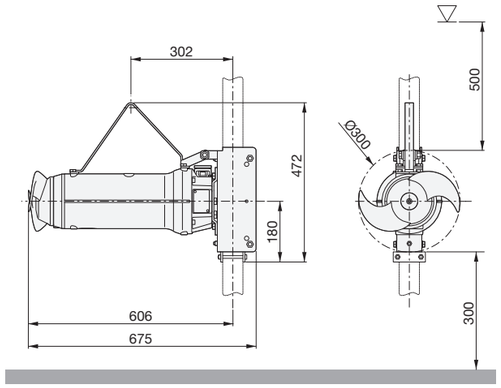

48 Kg (stand and guiding system excluded)

Product

Type	SUBMERSIBLE MIXER
Name	MMR33NF61.5D-5
Configured	-
Standard	CE

Motor

Rated Voltage	400 V
Frequency	50 Hz
Motor phases	3
Number of poles	6
Incoming power P2	1.5 kW
Electric power P1	1.8 kW
Rated current	3.7 A
rpm	942 rpm
Efficiency	82.5%
Cos Ø	0.703
Rated torque	15.2 Nm
Start	DOL
Starting current	18.9 A
Starting torque	32.5 Nm
Degree of protection	IP 68
Insulation class	H
Motor efficiency class ref.	IE3

Gear unit

Type	-
Gear ratio	1

Propeller

Name	33
Rated diameter	300 mm
Number of blades	2
rpm	942 rpm
Pp2	0.92 kW
Propeller thrust	350 N
Jet ring	Optional

Cable

Type	4G1.5 + 3x1
Length	10 m

Monitoring

Thermal protector	klixon
Leakage sensor	1 in mechanical seals chamber

Operating limits

Ambient temperature	0 - 40°C
Max. density treated liquid	1100 Kg/m³
pH treated liquid	6-14
Max. start per hour	20 /h (equally distributed)
Max. acoustic pressure level	Max 70 dB (A)
Operating mode	S1 – Continuous use

Construction materials

Case	Cast iron EN-GJL-250
Gear box	-
Propeller	AISI 316 (optional AISI 329)
Jet ring	-
Shaft	AISI 431
Mechanical seal (motor side)	Silicon carbide
Mechanical seal (propeller side)	Silicon carbide
Painting	Bi-epoxy 200 µm (optional 400 µm)
Screws	Stainless steel A2-70 (optional A4)
Gaskets	NBR
Fixing system	AISI 304 stainless steel (optional AISI 316)

Installation

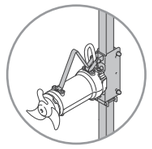

STANDARD

standard 60 x 60
optional 50 x 50
80 x 80
100 x 100

MMR

MMR31NF61.5D-5

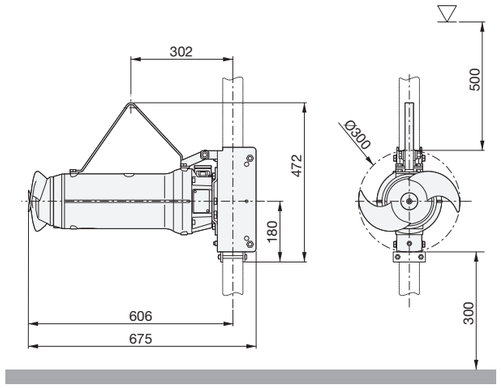

48 Kg (stand and guiding system excluded)

Product

Type	SUBMERSIBLE MIXER
Name	MMR31NF61.5D-5
Configured	-
Standard	CE

Motor

Rated Voltage	400 V
Frequency	50 Hz
Motor phases	3
Number of poles	6
Incoming power P2	1.5 kW
Electric power P1	1.8 kW
Rated current	3.7 A
rpm	942 rpm
Efficiency	82.5%
Cos Ø	0.703
Rated torque	15.2 Nm
Start	DOL
Starting current	18.9 A
Starting torque	32.5 Nm
Degree of protection	IP 68
Insulation class	H
Motor efficiency class ref.	IE3

Gear unit

Type	-
Gear ratio	1

Propeller

Name	31
Rated diameter	300 mm
Number of blades	2
rpm	942 rpm
Pp2	1.33 kW
Propeller thrust	450 N
Jet ring	Optional

Cable

Type	4G1.5 + 3x1
Length	10 m

Monitoring

Thermal protector	klixon
Leakage sensor	1 in mechanical seals chamber

Operating limits

Ambient temperature	0 - 60°C
Max. density treated liquid	1100 Kg/m³
pH treated liquid	6-14
Max. start per hour	20 /h (equally distributed)
Max. acoustic pressure level	Max 70 dB (A)
Operating mode	S1 – Continuous use

Construction materials

Case	Cast iron EN-GJL-250
Gear box	-
Propeller	AISI 316 (optional AISI 329)
Jet ring	-
Shaft	AISI 431
Mechanical seal (motor side)	Silicon carbide
Mechanical seal (propeller side)	Silicon carbide
Painting	Bi-epoxy 200 µm (optional 400 µm)
Screws	Stainless steel A2-70 (optional A4)
Gaskets	NBR
Fixing system	AISI 304 stainless steel (optional AISI 316)

Installation

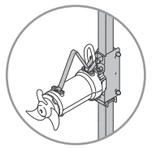

STANDARD

standard 60 x 60
optional 50 x 50
80 x 80
100 x 100

MMR

MMR32NF62.2D-5

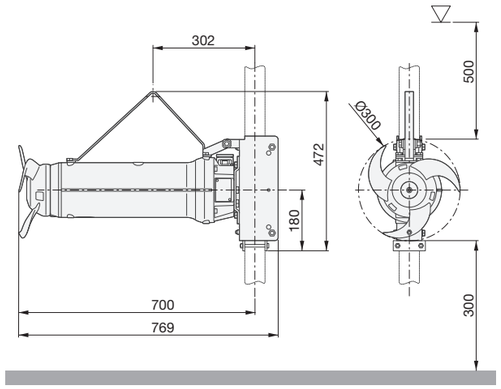

57 Kg (stand and guiding system excluded)

Product

Type	SUBMERSIBLE MIXER
Name	MMR32NF62.2D-5
Configured	-
Standard	CE

Motor

Rated Voltage	400 V
Frequency	50 Hz
Motor phases	3
Number of poles	6
Incoming power P2	2.2 kW
Electric power P1	2.6 kW
Rated current	5.5 A
rpm	942 rpm
Efficiency	84.3%
Cos Ø	0.685
Rated torque	22.3 Nm
Start	DOL
Starting current	29.6 A
Starting torque	47.6 Nm
Degree of protection	IP 68
Insulation class	H
Motor efficiency class ref.	IE3

Gear unit

Type	-
Gear ratio	1

Propeller

Name	32
Rated diameter	300 mm
Number of blades	3
rpm	942 rpm
Pp2	1.62 kW
Propeller thrust	500 N
Jet ring	Optional

Cable

Type	4G1.5 + 3x1
Length	10 m

Monitoring

Thermal protector	klixon
Leakage sensor	1 in mechanical seals chamber

Operating limits

Ambient temperature	0 - 60°C
Max. density treated liquid	1100 Kg/m³
pH treated liquid	6-14
Max. start per hour	20 /h (equally distributed)
Max. acoustic pressure level	Max 70 dB (A)
Operating mode	S1 – Continuous use

Construction materials

Case	Cast iron EN-GJL-250
Gear box	-
Propeller	AISI 316 (optional AISI 329)
Jet ring	-
Shaft	AISI 431
Mechanical seal (motor side)	Silicon carbide
Mechanical seal (propeller side)	Silicon carbide
Painting	Bi-epoxy 200 µm (optional 400 µm)
Screws	Stainless steel A2-70 (optional A4)
Gaskets	NBR
Fixing system	AISI 304 stainless steel (optional AISI 316)

Installation

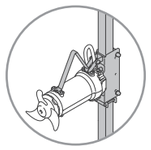

STANDARD

standard 60 x 60
optional 50 x 50
80 x 80
100 x 100

MMR

MMR34NF63.0D-5

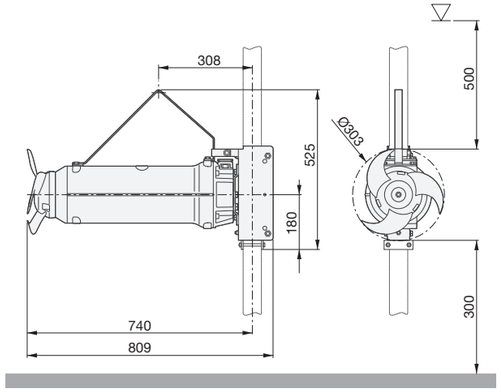

79 Kg (stand and guiding system excluded)

Product

Type	SUBMERSIBLE MIXER
Name	MMR34NF63.0D-5
Configured	-
Standard	CE

Motor

Rated Voltage	400 V
Frequency	50 Hz
Motor phases	3
Number of poles	6
Incoming power P2	3.0 kW
Electric power P1	3.5 kW
Rated current	6.8 A
rpm	960 rpm
Efficiency	85.6%
Cos Ø	0.749
Rated torque	29.8 Nm
Start	DOL
Starting current	37.8 A
Starting torque	44.8 Nm
Degree of protection	IP 68
Insulation class	H
Motor efficiency class ref.	IE3

Gear unit

Type	-
Gear ratio	1

Propeller

Name	34
Rated diameter	300 mm
Number of blades	3
rpm	960 rpm
Pp2	2.15 kW
Propeller thrust	660 N
Jet ring	Optional

Cable

Type	4G1.5 + 3x1
Length	10 m

Monitoring

Thermal protector	klixon
Leakage sensor	1 in mechanical seals chamber

Operating limits

Ambient temperature	0 - 60°C
Max. density treated liquid	1100 Kg/m³
pH treated liquid	6-14
Max. start per hour	20 /h (equally distributed)
Max. acoustic pressure level	Max 70 dB (A)
Operating mode	S1 – Continuous use

Construction materials

Case	Cast iron EN-GJL-250
Gear box	-
Propeller	AISI 316 (optional AISI 329)
Jet ring	-
Shaft	AISI 431
Mechanical seal (motor side)	Silicon carbide
Mechanical seal (propeller side)	Silicon carbide
Painting	Bi-epoxy 200 µm (optional 400 µm)
Screws	Stainless steel A2-70 (optional A4)
Gaskets	NBR
Fixing system	AISI 304 stainless steel (optional AISI 316)

Installation

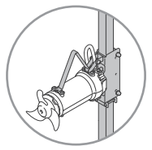

STANDARD

standard 60 x 60
optional 50 x 50
80 x 80
100 x 100

MMR

MMR35NF63.2D-5

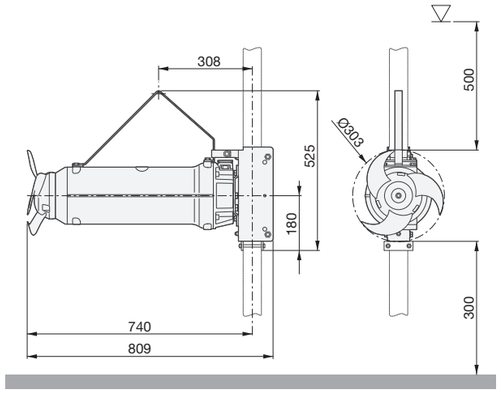

79 Kg (stand and guiding system excluded)

Product

Type	SUBMERSIBLE MIXER
Name	MMR35NF63.2D-5
Configured	-
Standard	CE

Motor

Rated Voltage	400 V
Frequency	50 Hz
Motor phases	3
Number of poles	6
Incoming power P2	3.2 kW
Electric power P1	3.7 kW
Rated current	7.1 A
rpm	957 rpm
Efficiency	85.9%
Cos Ø	0.757
Rated torque	31.9 Nm
Start	DOL
Starting current	37.6 A
Starting torque	45.0 Nm
Degree of protection	IP 68
Insulation class	H
Motor efficiency class ref.	IE3

Gear unit

Type	-
Gear ratio	1

Propeller

Name	35
Rated diameter	300 mm
Number of blades	3
rpm	957 rpm
Pp2	2.99 kW
Propeller thrust	820 N
Jet ring	Optional

Cable

Type	4G1.5 + 3x1
Length	10 m

Monitoring

Thermal protector	klixon
Leakage sensor	1 in mechanical seals chamber

Operating limits

Ambient temperature	0 - 60°C
Max. density treated liquid	1100 Kg/m³
pH treated liquid	6-14
Max. start per hour	20 /h (equally distributed)
Max. acoustic pressure level	Max 70 dB (A)
Operating mode	S1 – Continuous use

Construction materials

Case	Cast iron EN-GJL-250
Gear box	-
Propeller	AISI 316 (optional AISI 329)
Jet ring	-
Shaft	AISI 431
Mechanical seal (motor side)	Silicon carbide
Mechanical seal (propeller side)	Silicon carbide
Painting	Bi-epoxy 200 µm (optional 400 µm)
Screws	Stainless steel A2-70 (optional A4)
Gaskets	NBR
Fixing system	AISI 304 stainless steel (optional AISI 316)

Installation

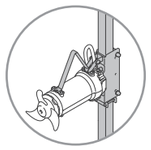

STANDARD

standard 60 x 60
optional 50 x 50
80 x 80
100 x 100

MMR

MMR42NF83.0D-5

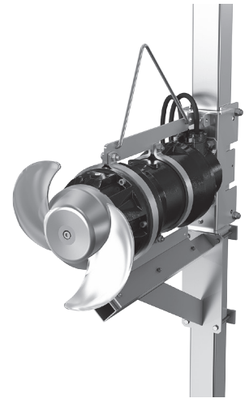

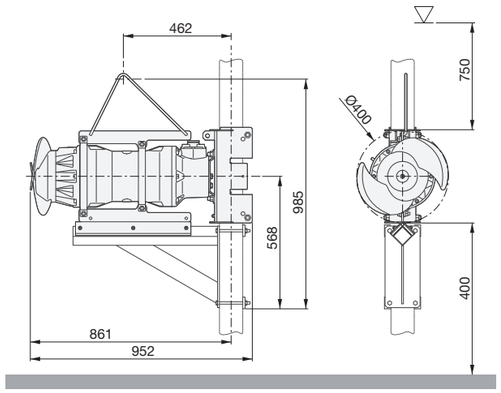

123 Kg (stand and guiding system excluded)

Product

Type	SUBMERSIBLE MIXER
Name	MMR42NF83.0D-5
Configured	-
Standard	CE

Motor

Rated Voltage	400 V
Frequency	50 Hz
Motor phases	3
Number of poles	8
Incoming power P2	3.0 kW
Electric power P1	3.6 kW
Rated current	7.3 A
rpm	716 rpm
Efficiency	83.5%
Cos Ø	0.707
Rated torque	40 Nm
Start	DOL
Starting current	25.0 A
Starting torque	44.3 Nm
Degree of protection	IP 68
Insulation class	H
Motor efficiency class ref.	IE3

Gear unit

Type	-
Gear ratio	1

Propeller

Name	42
Rated diameter	400 mm
Number of blades	2
rpm	716 rpm
Pp2	2.18 kW
Propeller thrust	625 N
Jet ring	Optional

Cable

Type	4G2.5 + 3x1
Length	10 m

Monitoring

Thermal protector	klixon
Leakage sensor	1 in mechanical seals chamber

Operating limits

Ambient temperature	0 - 60°C
Max. density treated liquid	1100 Kg/m³
pH treated liquid	6-14
Max. start per hour	20 /h (equally distributed)
Max. acoustic pressure level	Max 70 dB (A)
Operating mode	S1 – Continuous use

Construction materials

Case	Cast iron EN-GJL-250
Gear box	-
Propeller	AISI 316 (optional AISI 329)
Jet ring	-
Shaft	AISI 431
Mechanical seal (motor side)	Silicon carbide
Mechanical seal (propeller side)	Silicon carbide
Painting	Bi-epoxy 200 µm (optional 400 µm)
Screws	Stainless steel A2-70 (optional A4)
Gaskets	NBR
Fixing system	AISI 304 stainless steel (optional AISI 316)

Installation

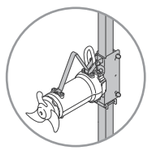

STANDARD

standard 100 x 100

MMR

MMR44NF84.5D-5

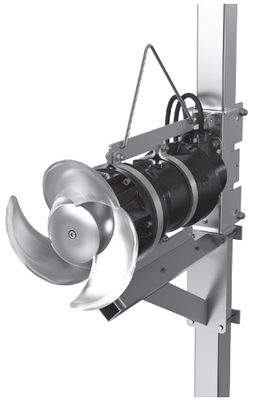

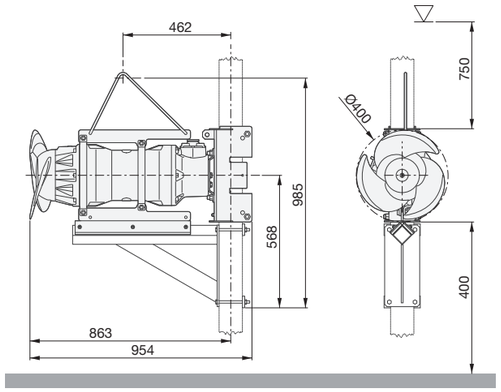

130 Kg (stand and guiding system excluded)

Product

Type	SUBMERSIBLE MIXER
Name	MMR44NF84.5D-5
Configured	-
Standard	CE

Motor

Rated Voltage	400 V
Frequency	50 Hz
Motor phases	3
Number of poles	8
Incoming power P2	4.5 kW
Electric power P1	5.28 kW
Rated current	10.61 A
rpm	718 rpm
Efficiency	85.3 %
Cos Ø	0.717
Rated torque	59.87 Nm
Start	DOL
Starting current	40.4 A
Starting torque	49.3 Nm
Degree of protection	IP 68
Insulation class	H
Motor efficiency class ref.	IE3

Gear unit

Type	-
Gear ratio	1

Propeller

Name	44
Rated diameter	400 mm
Number of blades	3
rpm	714 rpm
Pp2	4.0 kW
Propeller thrust	1060 N
Jet ring	Optional

Cable

Type	4G2.5 + 3x1
Length	10 m

Monitoring

Thermal protector	klixon
Leakage sensor	1 in mechanical seals chamber

Operating limits

Ambient temperature	0 - 60°C
Max. density treated liquid	1100 Kg/m³
pH treated liquid	6-14
Max. start per hour	20 /h (equally distributed)
Max. acoustic pressure level	Max 70 dB (A)
Operating mode	S1 – Continuous use

Construction materials

Case	Cast iron EN-GJL-250
Gear box	-
Propeller	AISI 316 (optional AISI 329)
Jet ring	-
Shaft	AISI 431
Mechanical seal (motor side)	Silicon carbide
Mechanical seal (propeller side)	Silicon carbide
Painting	Bi-epoxy 200 µm (optional 400 µm)
Screws	Stainless steel A2-70 (optional A4)
Gaskets	NBR
Fixing system	AISI 304 stainless steel (optional AISI 316)

Installation

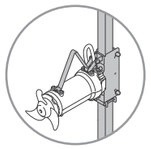

STANDARD

standard 100 x 100

MMR

MMR61NF44.0G072-5

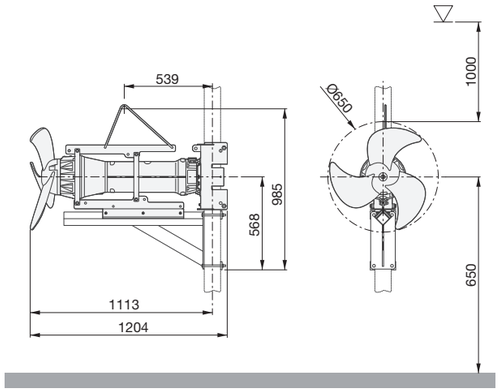

145 Kg (stand and guiding system excluded)

Product

Type	SUBMERSIBLE MIXER
Name	MMR61NF44.0G072-5
Configured	-
Standard	CE

Motor

Rated Voltage	400 V
Frequency	50 Hz
Motor phases	3
Number of poles	4
Incoming power P2	4.0 kW
Electric power P1	4.5 kW
Rated current	8.4 A
rpm	1455 rpm
Efficiency	88.7 %
Cos Ø	0.770
Rated torque	26.3 Nm
Start	DOL
Starting current	48.7 A
Starting torque	52.0 Nm
Degree of protection	IP 68
Insulation class	H
Motor efficiency class ref.	IE3

Gear unit

Type	1-stage planetary
Gear ratio	7.2

Propeller

Name	44
Rated diameter	650 mm
Number of blades	3
rpm	202 rpm
Pp2	1.98 kW
Propeller thrust	1025 N
Jet ring	Optional

Cable

Type	4G2.5 + 3x1
Length	10 m

Monitoring

Thermal protector	klixon
Leakage sensor	1 in mechanical seals chamber

Operating limits

Ambient temperature	0 - 60°C
Max. density treated liquid	1100 Kg/m³
pH treated liquid	6-14
Max. start per hour	20 /h (equally distributed)
Max. acoustic pressure level	Max 70 dB (A)
Operating mode	S1 – Continuous use

Construction materials

Case	Cast iron EN-GJL-250
Gear box	-
Propeller	AISI 316 (optional AISI 329)
Jet ring	-
Shaft	AISI 431
Mechanical seal (motor side)	Silicon carbide
Mechanical seal (propeller side)	Silicon carbide
Painting	Bi-epoxy 200 µm (optional 400 µm)
Screws	Stainless steel A2-70 (optional A4)
Gaskets	NBR
Fixing system	AISI 304 stainless steel (optional AISI 316)

Installation

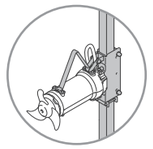

STANDARD

standard 100 x 100

MMR

MMR61NF44.0G066-5

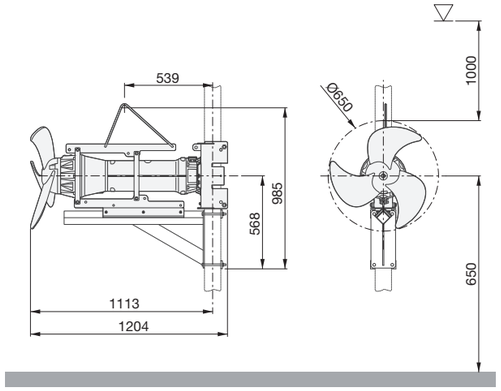

145 Kg (stand and guiding system excluded)

Product

Type	SUBMERSIBLE MIXER
Name	MMR61NF44.0G066-5
Configured	-
Standard	CE

Motor

Rated Voltage	400 V
Frequency	50 Hz
Motor phases	3
Number of poles	4
Incoming power P2	4.0 kW
Electric power P1	4.5 kW
Rated current	8.4 A
rpm	1455 rpm
Efficiency	88.7 %
Cos Ø	0.770
Rated torque	26.3 Nm
Start	DOL
Starting current	48.7 A
Starting torque	52.0 Nm
Degree of protection	IP 68
Insulation class	H
Motor efficiency class ref.	IE3

Gear unit

Type	1-stage planetary
Gear ratio	6.6

Propeller

Name	61
Rated diameter	650 mm
Number of blades	3
rpm	219 rpm
Pp2	2.52 kW
Propeller thrust	1165 N
Jet ring	Optional

Cable

Type	4G2.5 + 3x1
Length	10 m

Monitoring

Thermal protector	klixon
Leakage sensor	1 in mechanical seals chamber

Operating limits

Ambient temperature	0 - 40°C
Max. density treated liquid	1100 Kg/m^3
pH treated liquid	6-14
Max. start per hour	20 /h (equally distributed)
Max. acoustic pressure level	Max 70 dB (A)
Operating mode	S1 – Continuous use

Construction materials

Case	Cast iron EN-GJL-250
Gear box	-
Propeller	AISI 316 (optional AISI 329)
Jet ring	-
Shaft	AISI 431
Mechanical seal (motor side)	Silicon carbide
Mechanical seal (propeller side)	Silicon carbide
Painting	Bi-epoxy 200 µm (optional 400 µm)
Screws	Stainless steel A2-70 (optional A4)
Gaskets	NBR
Fixing system	AISI 304 stainless steel (optional AISI 316)

Installation

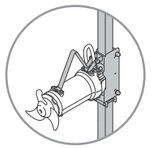

STANDARD

standard 100 x 100

MMR

MMR61NF45.5G058-5

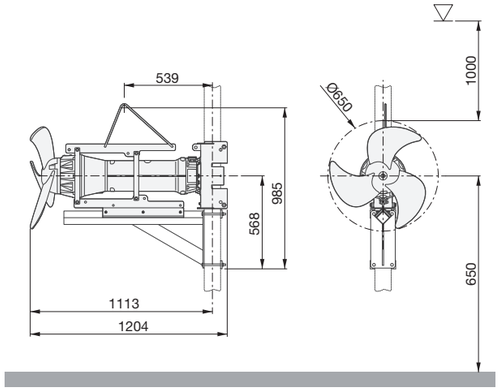

148 Kg (stand and guiding system excluded)

Product

Type	SUBMERSIBLE MIXER
Name	MMR61NF45.5G058-5
Configured	-
Standard	CE

Motor

Rated Voltage	400 V
Frequency	50 Hz
Motor phases	3
Number of poles	4
Incoming power P2	5.5 kW
Electric power P1	6.1 kW
Rated current	11.7 A
rpm	1450 rpm
Efficiency	89.6 %
Cos Ø	0.760
Rated torque	36.2 Nm
Start	DOL
Starting current	64.0 A
Starting torque	72.4 Nm
Degree of protection	IP 68
Insulation class	H
Motor efficiency class ref.	IE3

Gear unit

Type	1-stage planetary
Gear ratio	5.8

Propeller

Name	61
Rated diameter	650 mm
Number of blades	3
rpm	251 rpm
Pp2	3.80 kW
Propeller thrust	1500 N
Jet ring	Optional

Cable

Type	4G2.5 + 3x1
Length	10 m

Monitoring

Thermal protector	klixon
Leakage sensor	1 in mechanical seals chamber

Operating limits

Ambient temperature	0 - 60°C
Max. density treated liquid	1100 Kg/m^3
pH treated liquid	6-14
Max. start per hour	20 /h (equally distributed)
Max. acoustic pressure level	Max 70 dB (A)
Operating mode	S1 – Continuous use

Construction materials

Case	Cast iron EN-GJL-250
Gear box	-
Propeller	AISI 316 (optional AISI 329)
Jet ring	-
Shaft	AISI 431
Mechanical seal (motor side)	Silicon carbide
Mechanical seal (propeller side)	Silicon carbide
Painting	Bi-epoxy 200 µm (optional 400 µm)
Screws	Stainless steel A2-70 (optional A4)
Gaskets	NBR
Fixing system	AISI 304 stainless steel (optional AISI 316)

Installation

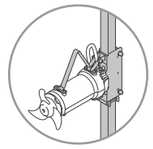

STANDARD

standard 100 x 100

MMR

MMR61NF45.5G054-5

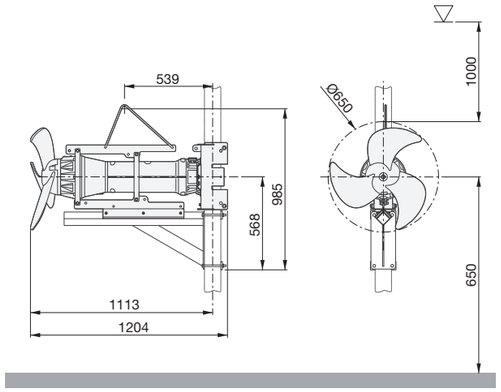

148 Kg (stand and guiding system excluded)

Product

Type	SUBMERSIBLE MIXER
Name	MMR61NF45.5G054-5
Configured	-
Standard	CE

Motor

Rated Voltage	400 V
Frequency	50 Hz
Motor phases	3
Number of poles	4
Incoming power P2	5.5 kW
Electric power P1	6.1 kW
Rated current	11.7 A
rpm	1450 rpm
Efficiency	89.6 %
Cos Ø	0.760
Rated torque	36.2 Nm
Start	DOL
Starting current	64.0 A
Starting torque	72.4 Nm
Degree of protection	IP 68
Insulation class	H
Motor efficiency class ref.	IE3

Gear unit

Type	1-stage planetary
Gear ratio	5.4

Propeller

Name	61
Rated diameter	650 mm
Number of blades	3
rpm	267 rpm
Pp2	4.40 kW
Propeller thrust	1700 N
Jet ring	Optional

Cable

Type	4G2.5 + 3x1
Length	10 m

Monitoring

Thermal protector	klixon
Leakage sensor	1 in mechanical seals chamber

Operating limits

Ambient temperature	0 - 60°C
Max. density treated liquid	1100 Kg/m³
pH treated liquid	6-14
Max. start per hour	20 /h (equally distributed)
Max. acoustic pressure level	Max 70 dB (A)
Operating mode	S1 – Continuous use

Construction materials

Case	Cast iron EN-GJL-250
Gear box	-
Propeller	AISI 316 (optional AISI 329)
Jet ring	-
Shaft	AISI 431
Mechanical seal (motor side)	Silicon carbide
Mechanical seal (propeller side)	Silicon carbide
Painting	Bi-epoxy 200 µm (optional 400 µm)
Screws	Stainless steel A2-70 (optional A4)
Gaskets	NBR
Fixing system	AISI 304 stainless steel (optional AISI 316)

Installation

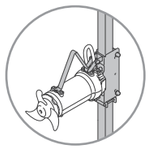

STANDARD

standard 100 x 100

MMR

MMR61NF47.5G049-5

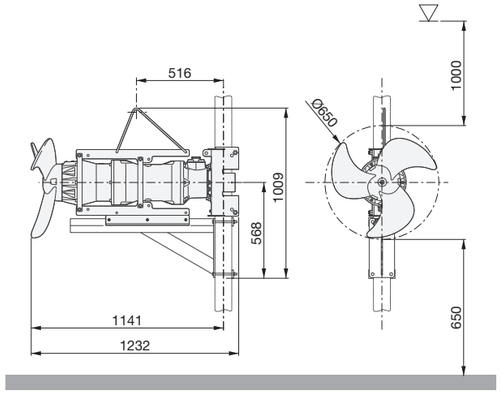

184 Kg (stand and guiding system excluded)

Product

Type	SUBMERSIBLE MIXER
Name	MMR61NF47.5G049-5
Configured	-
Standard	CE

Motor

Rated Voltage	400 V
Frequency	50 Hz
Motor phases	3
Number of poles	4
Incoming power P2	7.5 kW
Electric power P1	8.3 kW
Rated current	14.5 A
rpm	1460 rpm
Efficiency	90.4 %
Cos Ø	0.830
Rated torque	49.1 Nm
Start	DOL
Starting current	96.6 A
Starting torque	119.2 Nm
Degree of protection	IP 68
Insulation class	H
Motor efficiency class ref.	IE3

Gear unit

Type	1-stage planetary
Gear ratio	4.9

Propeller

Name	61
Rated diameter	650 mm
Number of blades	3
rpm	300 rpm
Pp2	5.80 kW
Propeller thrust	2100 N
Jet ring	Optional

Cable

Type	4G6
Length	10 m

Monitoring

Thermal protector	klixon
Leakage sensor	1 in mechanical seals chamber

Operating limits

Ambient temperature	0 - 60°C
Max. density treated liquid	1100 Kg/m³
pH treated liquid	6-14
Max. start per hour	20 /h (equally distributed)
Max. acoustic pressure level	Max 70 dB (A)
Operating mode	S1 – Continuous use

Construction materials

Case	Cast iron EN-GJL-250
Gear box	-
Propeller	AISI 316 (optional AISI 329)
Jet ring	-
Shaft	AISI 431
Mechanical seal (motor side)	Silicon carbide
Mechanical seal (propeller side)	Silicon carbide
Painting	Bi-epoxy 200 µm (optional 400 µm)
Screws	Stainless steel A2-70 (optional A4)
Gaskets	NBR
Fixing system	AISI 304 stainless steel (optional AISI 316)

Installation

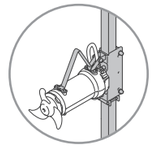

STANDARD

standard 100 x 100

MMR Series – Stainless Steel Casting Type –

General characteristics

- Innovative cable gland system with cable holder. The universal thread ring-nut can be removed to fix a rigid or flexible duct to the cable gland to protect the cable from physical and mechanical stresses.
- Two silicon carbide (SiC) mechanical seals protected inside a large, inspectable oil chamber.
- Cast AISI 316 stainless steel propeller, designed with specially shaped blades to ensure high hydraulic efficiency and prevent fouling with filaments and solids. Extra thick for ruggedness and reliability even in heavy-duty conditions.
- Ball bearings with lifetime lubrication designed to guarantee 100,000 working hours.
- Wide range of rugged stainless steel accessories for optimal installation in relation to the system layout and when replacing existing devices.
- Cast stainless steel AISI 316 motor body.

Available models

- 4 poles motor with DIRECT TRANSMISSION
- Motor power 0.75 - 1.1 kW
- Propeller Ø 200 mm

Key to product code

MMR 2 2 N R 4 1.1 D - 5

① ② ③ ④ ⑤ ⑥ ⑦ ⑧ ⑨

① Series
② Propeller diameter
- 2 : Ø 200
- 3 : Ø 300
- 4 : Ø 400
- 6 : Ø 650

③ Type of propeller
④ With or without guide ring
- N : Without
- G : With

⑤ Material
- F : Cast iron
- R : Stainless steel

⑥ Poles
⑦ Motor power (kW)
⑧ Drive type
- D : Direct transmission
- G××× : Reduction gear + ratio
- ex) G 072 : Gear with 7.2 ratio

⑨ Frequency

MMR

MMR21NR4.75D-5

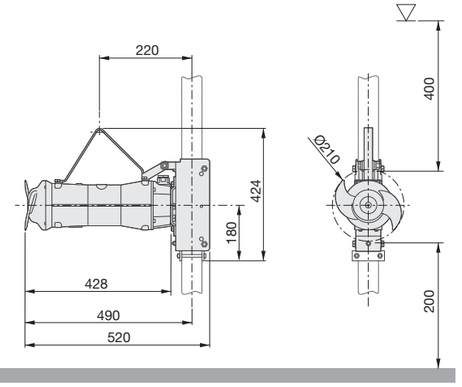

23 Kg (stand and guiding system excluded)

Product

Type	SUBMERSIBLE MIXER
Name	MMR21NR4.75D-5
Configured	-
Standard	CE

Motor

Rated Voltage	400 V
Frequency	50 Hz
Motor phases	3
Number of poles	4
Incoming power P2	0.75 kW
Electric power P1	1.0kW
Rated current	2.0 A
rpm	1396 rpm
Efficiency	76%
Cos Ø	0.719
Rated torque	5.1 Nm
Start	DOL
Starting current	8.7 A
Starting torque	11.9 Nm
Degree of protection	IP 68
Insulation class	H

Gear unit

Type	-
Gear ratio	1

Propeller

Name	21
Rated diameter	200 mm
Number of blades	2
rpm	1396 rpm
Pp2	0.48 kW
Propeller thrust	155 N
Jet ring	-

Cable

Type	4G1.5
Length	10 m

Monitoring

Thermal protector	-
Leakage sensor	-

Operating limits

Ambient temperature	0 - 40°C
Max. density treated liquid	1100 Kg/m³
pH treated liquid	3-14
Max. start per hour	20 /h (equally distributed)
Max. acoustic pressure level	Max 70 dB (A)
Operating mode	S1 – Continuous use

Construction materials

Case	AISI 316
Gear box	-
Propeller	AISI 316 (optional AISI 329)
Jet ring	-
Shaft	AISI 431
Mechanical seal (motor side)	Silicon carbide
Mechanical seal (propeller side)	Silicon carbide
Painting	Bi-epoxy 200 µm (optional 400 µm)
Screws	Stainless steel A2-70 (optional A4)
Gaskets	NBR
Fixing system	AISI 304 stainless steel (optional AISI 316)

Installation

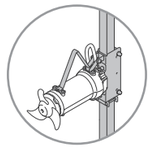

STANDARD

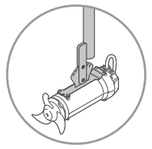

OPTIONAL

standard 60 x 60
optional 50 x 50
80 x 80
100 x 100

MMR series

MMR

MMR22NR41.1D-5

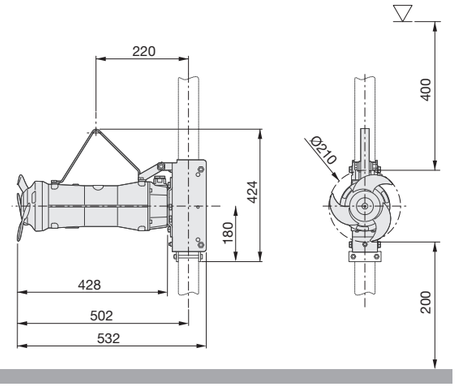

23 Kg (stand and guiding system excluded)

Product

Type	SUBMERSIBLE MIXER
Name	MMR22NR41.1D-5
Configured	-
Standard	CE

Motor

Rated Voltage	400 V
Frequency	50 Hz
Motor phases	3
Number of poles	4
Incoming power P2	1.1 kW
Electric power P1	1.5 kW
Rated current	3.0 A
rpm	1380 rpm
Efficiency	75.0%
Cos Ø	0.701
Rated torque	7.6 Nm
Start	DOL
Starting current	12.4 A
Starting torque	17.8 Nm
Degree of protection	IP 68
Insulation class	H

Gear unit

Type	-
Gear ratio	1

Propeller

Name	22
Rated diameter	200 mm
Number of blades	3
rpm	1380 rpm
Pp2	0.95 kW
Propeller thrust	210 N
Jet ring	-

Cable

Type	4G1.5
Length	10 m

Monitoring

Thermal protector	-
Leakage sensor	-

Operating limits

Ambient temperature	0 - 40°C
Max. density treated liquid	1100 Kg/m³
pH treated liquid	3-14
Max. start per hour	20 /h (equally distributed)
Max. acoustic pressure level	Max 70 dB (A)
Operating mode	S1 – Continuous use

Construction materials

Case	AISI 316
Gear box	-
Propeller	AISI 316 (optional AISI 329)
Jet ring	-
Shaft	AISI 431
Mechanical seal (motor side)	Silicon carbide
Mechanical seal (propeller side)	Silicon carbide
Painting	Bi-epoxy 200 µm (optional 400 µm)
Screws	Stainless steel A2-70 (optional A4)
Gaskets	NBR
Fixing system	AISI 304 stainless steel (optional AISI 316)

Installation

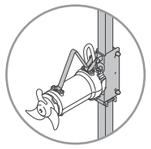

STANDARD

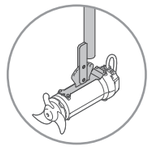

OPTIONAL

standard 60 x 60
optional 50 x 50
80 x 80
100 x 100

Installations and accessories

To guarantee top mixer performance, Tsurumi has developed a wide range of accessories for adjusting devices' positions in the tank and lifting and removing them without having to drain the system.
Designed for easy installation and generously sized to guarantee durability, accessories are available in galvanised or stainless steel.

The recommended installation modes are:

Mast installation (fig. A and B)

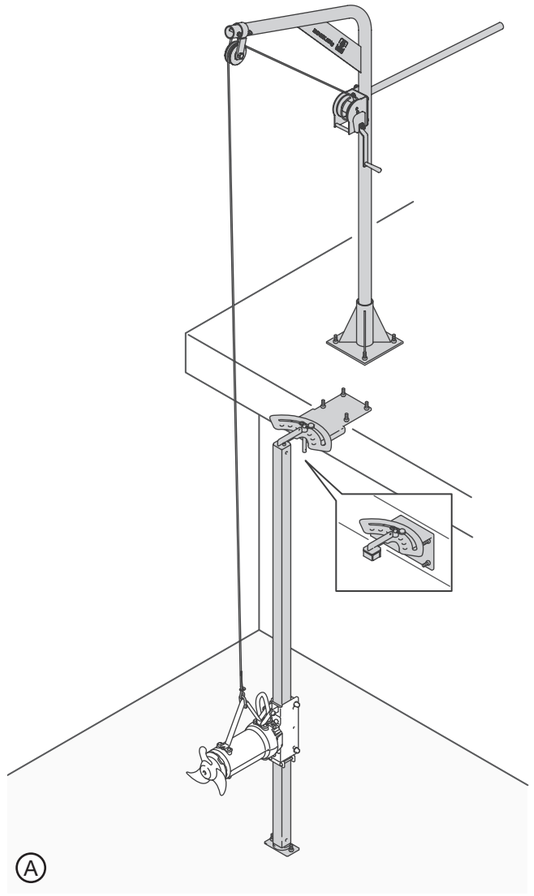

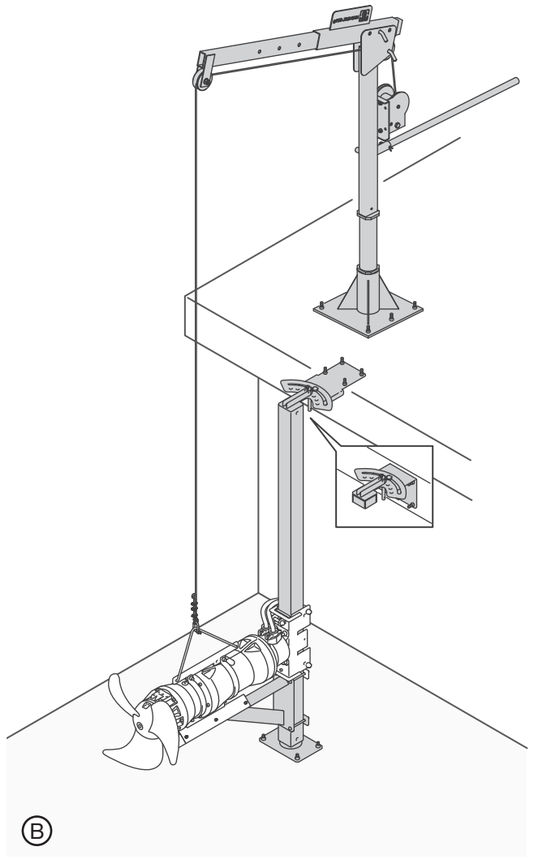

The most widely used installation mode, suitable for mixers of any shape and size.
The mixer, fitted with a runner which is also compatible with existing installations, slides along a square post and can be removed with no need to drain the tank, thanks to rugged lifting jib cranes.
The mixer can be horizontally adjusted for the best possible position, while vertical adjustment is possible with the aid of special optional runners.

Pendular installation (fig. C)

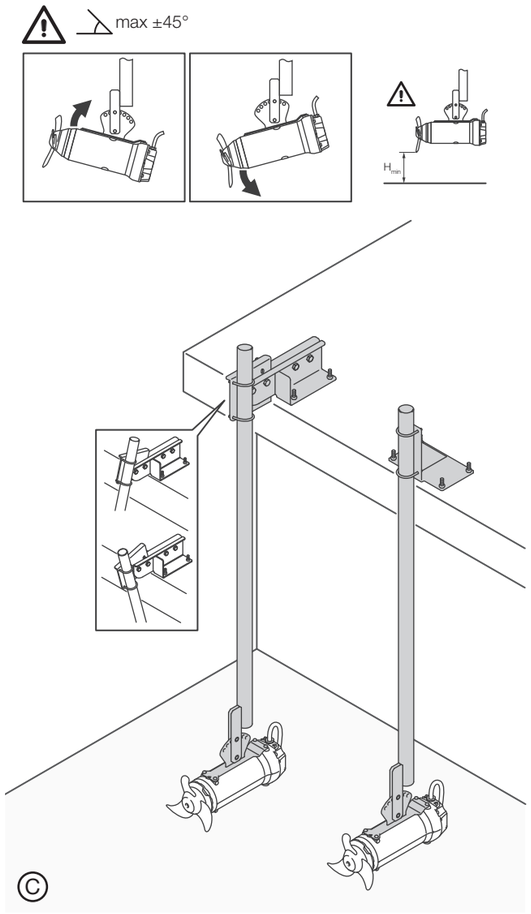

Mobile installation in which the mixer can be both installed and removed with the tank full.
The mixer is suspended from a suspension pipe and fixed to a mounting bracket; it can be adjusted both horizontally and vertically

Accessories

	Code	Description	Material	Suitable for mixers
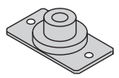	27.814	60x60 mm base pole mixer	AISI 304	MMR 200 MMR 300
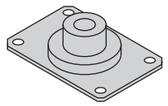	27.812	100x100 mm base pole mixer	AISI 304	MMR 200 MMR 300 MMR 400 MMR 650
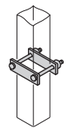	27.982	Stop fitting for 60x60 mm pole	AISI 304	MMR 200 MMR 300
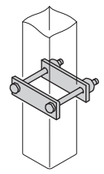	26.157	Stop fitting for 100x100 mm pole	AISI 304	MMR 200 MMR 300
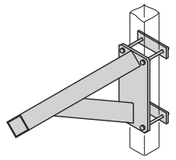	28.715	Stop fitting support for 100x100 mm pole	AISI 304	MMR 400
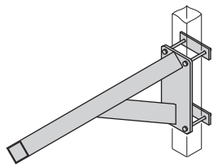	28.056	Stop fitting support for 100x100 mm pole	AISI 304	MMR 650

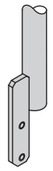	27.992	Guide for suspended installation	AISI 304	MMR 200
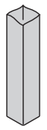	27.821	60x60 mm pole Lenght = 3 m	AISI 304	MMR 200 MMR 300
	-	60x60 mm pole Lenght = 6 m	AISI 304	MMR 200 MMR 300
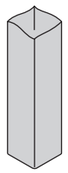	27.818	100x100 mm pole Lenght = 3 m	AISI 304	MMR 200 MMR 300 MMR 400 MMR 650
	-	100x100 mm pole Lenght = 6 m	AISI 304	MMR 200 MMR 300 MMR 400 MMR 650
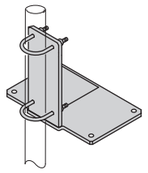	27.996	Fixed upper bracket floor for Ø 2” pole	AISI 304	MMR 200
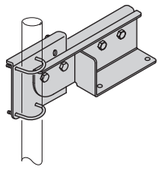	28.032	Adjustable upper bracket a floor for Ø 2” pole	AISI 304	MMR 200
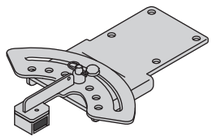	28.018	Upper bracket floor for 60x60 mm pole	AISI 304	MMR 200 MMR 300
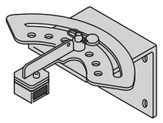	28.017	Upper bracket wall for 60x60 mm pole	AISI 304	MMR 200 MMR 300

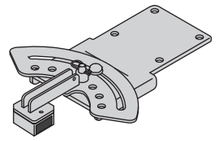	28.016	Upper bracket floor for 100x100 mm pole	AISI 304	MMR 300 MMR 400 MMR 650
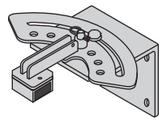	28.015	Upper bracket wall for 100x100 mm pole	AISI 304	MMR 200 MMR 300 MMR 400 MMR 650
	28.067	Crane for Ø60 mm pole (max capacity 200 kg)	Galvanized steel	MMR 200 MMR 300
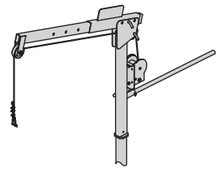	28.399	Crane for Ø100 mm pole (max capacity 450 kg)	Galvanized steel	MMR 200 MMR 300 MMR 400 MMR 650
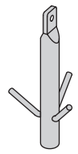	24.659	Lifting hook	Galvanized steel	MMR 200 MMR 300 MMR 400 MMR 650
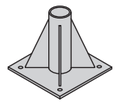	28.074	Base for crane Ø60 mm pole	AISI 304	MMR 200 MMR 300
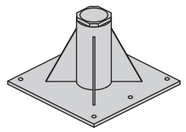	28.073	Base for crane Ø100 mm pole	AISI 304	MMR 200 MMR 300 MMR 400 MMR 650

TSURUMI PUMP

www.tsurumiavant.com

Product images and specifications may differ from actual products due to improvements.
The OO series and model OO are indicated with our series/model codes in this booklet.

© 2021 TSURUMI MANUFACTURING CO., LTD.
Printed in Japan IA158-A NZ-B-J-Y

29040110420400000
Rev. 2 - 01/02/20
29040110420400001
Rev. 0 - 01/02/20